Tear Sheet
Model EPD - Pocket door set by KARCHER DESIGN

KARCHER DESIGN GERMANY
contact our US office
Karcher Design NA
1042 Industry Dr.
Tukwila WA 98188
Office: 844 858-2033
Fax 253-236-4469
order@karcher-design.com
www.karcher-design.com

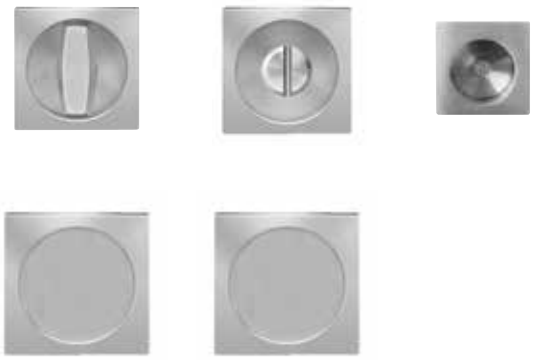

Finish: satin stainless steel (71)

To suit 2 1/8" door prep

EPD- Pocket door set

product code

EPDQ 71	outside pull with emergency release inside pull with thumbturn, edge pull, lock, strikeplate
EPDQ PB 71	outside/inside pull with thumbturn, edge pull, lock, strike plate
EPDQ OS 71	outside/inside pull blank, edge pull

Features EPD

- door prep rose 2 1/8" (54 mm) to press into door
- door prep rose 2 3/16" (55 mm) to glue into door
- door prep finger pull 1" (25 mm) fixed with screw
- available door thickness 1 3/8" (35 mm), 1 3/4" (45 mm) 2 3/13" (55 mm). Please specify door thickness
- backset 2" (49,50 mm)
- hub 5/16" (8 mm)
- lock with strike plate

specification details

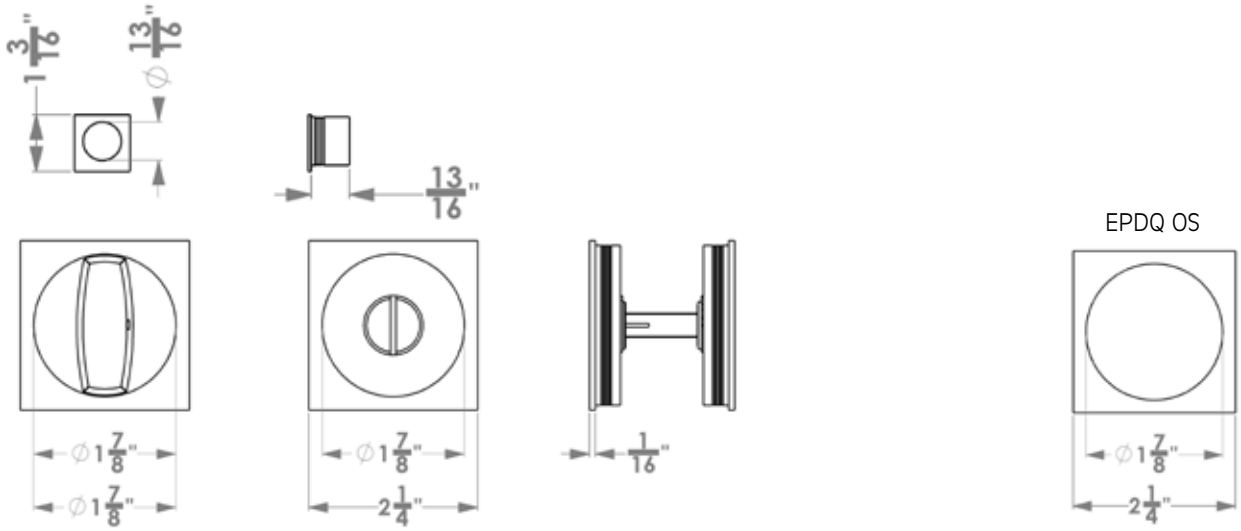

Please note: Karcher Design produts are designed and measured in metric. Imperial measurements are close approximations to the actual metric dimensions